Revised Record									
	1.0	New issue	2014-11-11						

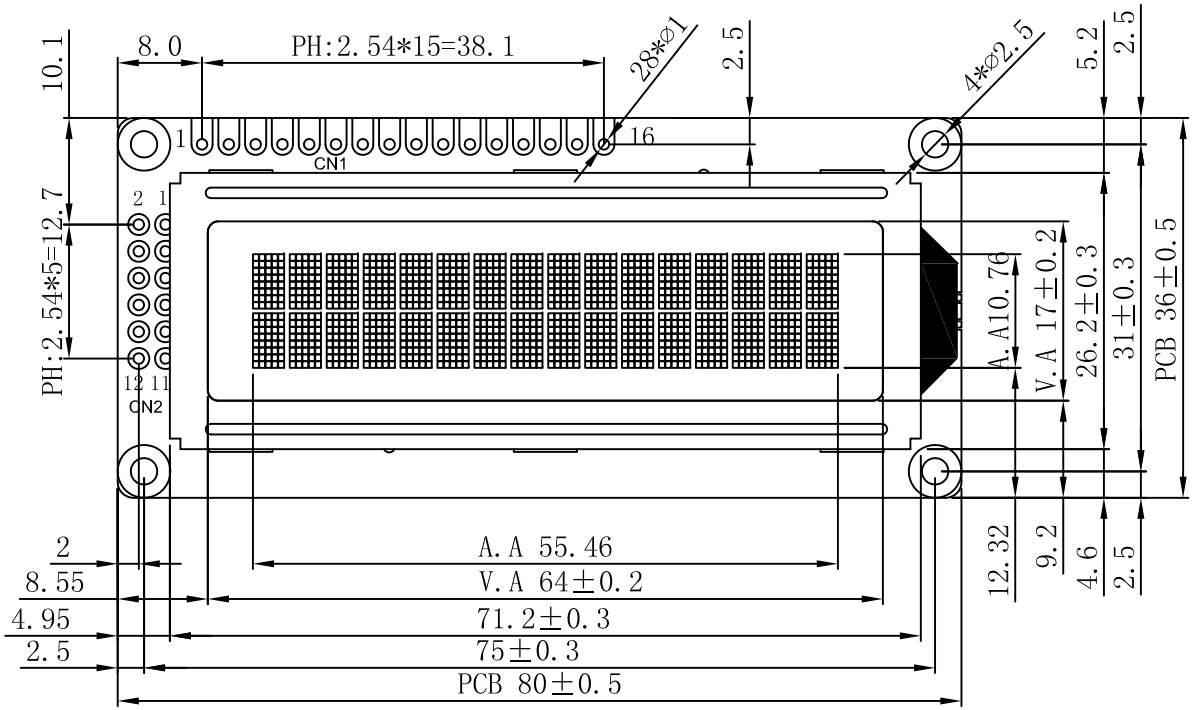

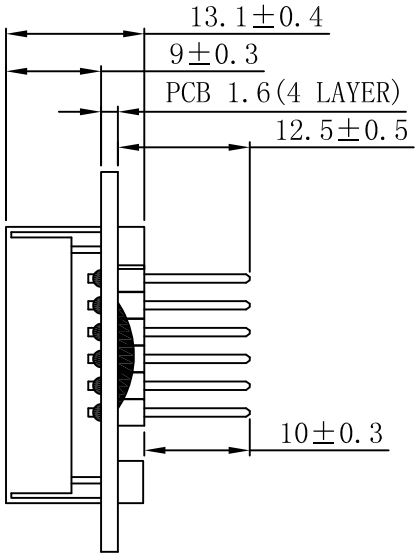

INTERFACE:

CN2		CN1	
1	LED_K	1	VSS
2	LED_A	2	VDD
3	VDD	3	V0
4	VSS	4	RS
5	RS	5	R/W
6	E	6	E
7	DB4	7	DB0
8	DB5	8	DB1
9	DB6	9	DB2
10	DB7	10	DB3
11	V0	11	DB4
12	R/W	12	DB5
		13	DB6
		14	DB7
		15	LED_A
		16	LED_K

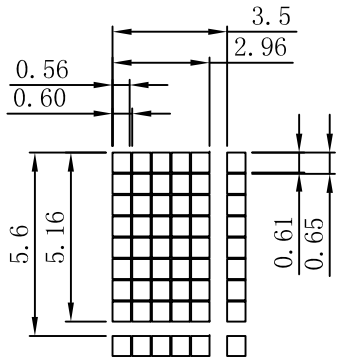

Customer's Choices:

DISPLAY TYPE:	
View angle:	
Temp:	
Voltage:	
IC:	
Fonts:	
Backlight:	
Other:	

NOTES:

01. DISPLAY TYPE: STN-BLUE/NEGATIVE/TRANSMISSIVE RoHS
02. OPERATING VOLTAGE: VOP=4.8V,VDD=5.0V
03. OPERATING TEMPERATURE: -20°C~+70°C
04. STORAGE TEMPERATURE: -30°C~+80°C
05. DRIVE MODE: 1/16DUTY,1/5BIAS
06. VIEWING DIRECTION: 6:00
07. DRIVE IC: ST7070(OR-EQV)
08. CONNECTOR: ZEBER
09. BACKLIGHT: LED(WHITE)
10. CUSTOMER'S PART ID: BLAZE_STANDARD_PRODUCT

Blaze Display Technology Co.,Ltd.

DESIGNED BY: BDT-26	BCB1602-03EB-SERIES	VERSION: 1.0
CHECKED BY: BDT-04		PAGE 1 OF 1
APPROVED BY: BDT-01		UNIT: mm
Website:http://www.blazedisplay.com		DATE: 2014-11-11