Revised Record									
	1.0	New issue	2009-07-26						

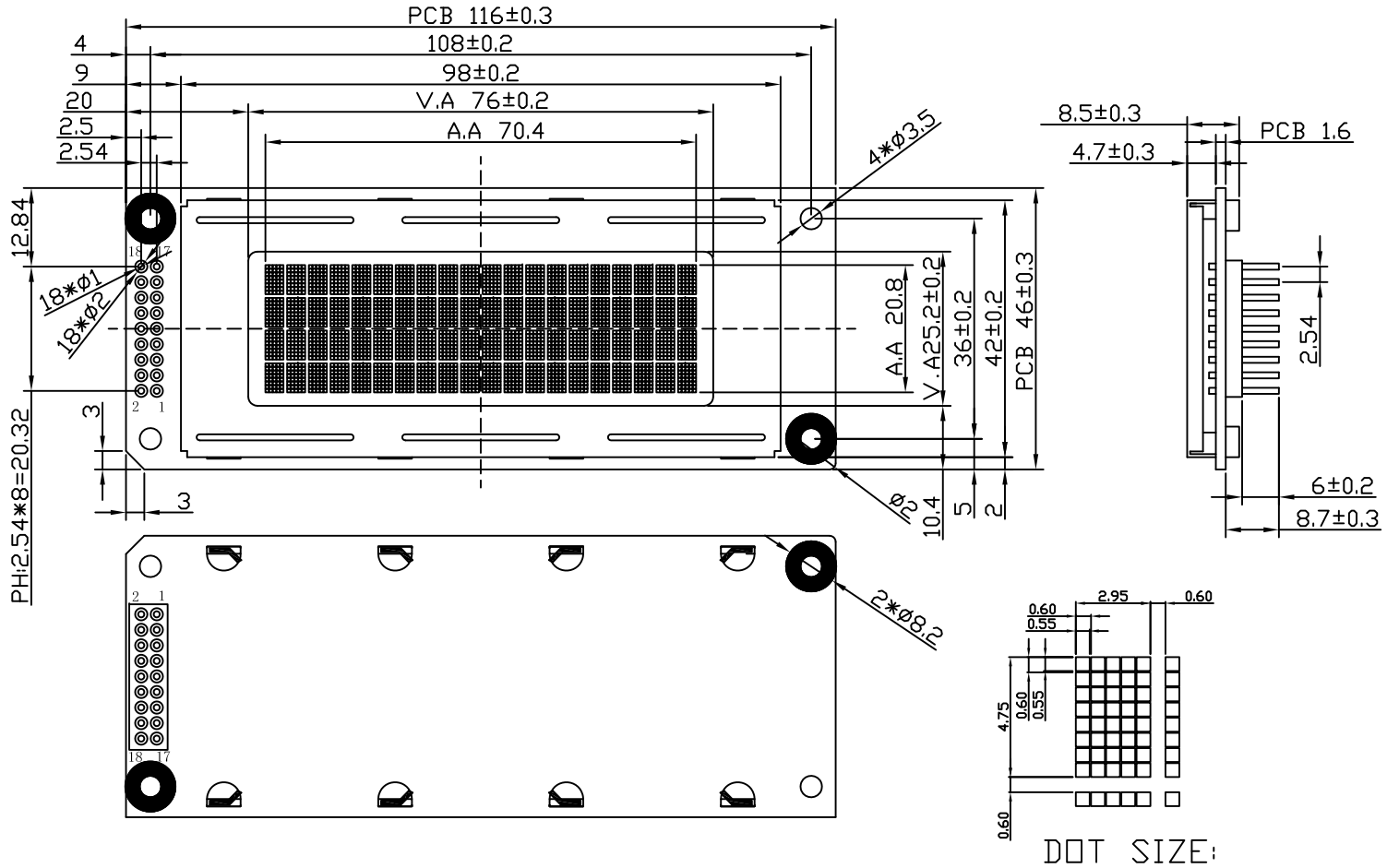

INTEERFACE	
1	VSS
2	VDD
3	V0
4	RS
5	RW
6	E
7	DB0
8	DB1
9	DB2
10	DB3
11	DB4
12	DB5
13	DB6
14	DB7
15	LED+(NC)
16	LED-(NC)
17	N.C
18	N.C

Customer's Choices:

DISPLAY TYPE:	
View angle:	
Temp:	
Voltage:	
IC:	
Fonts:	
Backlight:	
Other:	

NOTES:

01. DISPLAY TYPE: STN-GREY/POSITIVE/REFLECTIVE RoHS
02. OPERATING VOLTAGE: VOP=4.7V,VDD=5.0V
03. OPERATING TEMPERATURE: -20°C~+70°C
04. STORAGE TEMPERATURE: -30°C~+80°C
05. DRIVE MODE: 1/16DUTY,1/5BIAS
06. VIEWING DIRECTION: 6:00
07. DRIVE IC: ST7066U(OR-EQV)
08. CONNECTOR: ZEBER
09. BACKLIGHT: ---
10. CUSTOMER'S PART ID: BLAZE_STANDARD_PRODUCT

Blaze Display Technology Co.,Ltd.

DESIGNED BY: BDT-24	BCB2004-04-SERIES	VERSION: 1.0
CHECKED BY: BDT-06		PAGE 1 OF 1
APPROVED BY: BDT-02		UNIT: mm
Website:http://www.blazedisplay.com		DATE: 2009-07-26